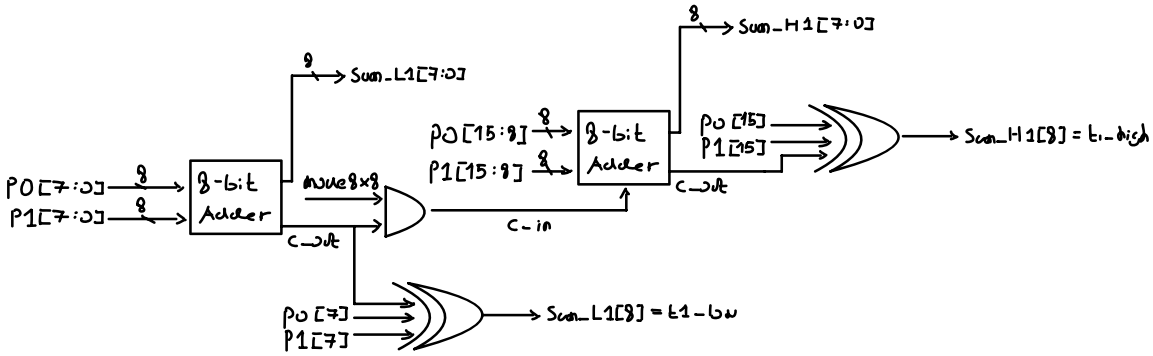
P0[7:0]
P1[7:0]
8
8-bit Adder
Sum_L1[7:0]
mux8x8
C_out
C_in
P0[15:8]
P1[15:8]
8-bit Adder
Sum_H1[7:0]
P0[15]
P1[15]
Sum_H1[8] = t1_high
P0[7]
P1[7]
Sum_L1[8] = t1_low

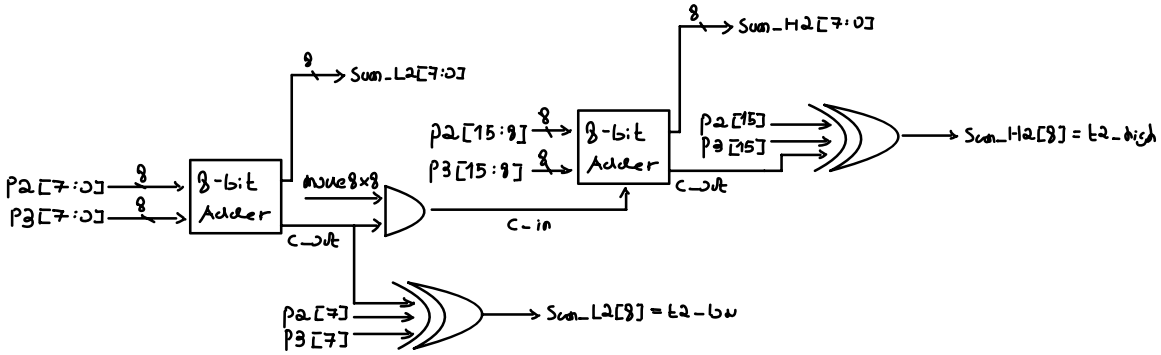
P2[7:0]
P3[7:0]
8
8-bit Adder
Sum_L2[7:0]
mux8x8
C_out
C_in
P2[15:8]
P3[15:8]
8-bit Adder
Sum_H2[7:0]
P2[15]
P3[15]
Sum_H2[8] = t2_high
P2[7]
P3[7]
Sum_L2[8] = t2_low

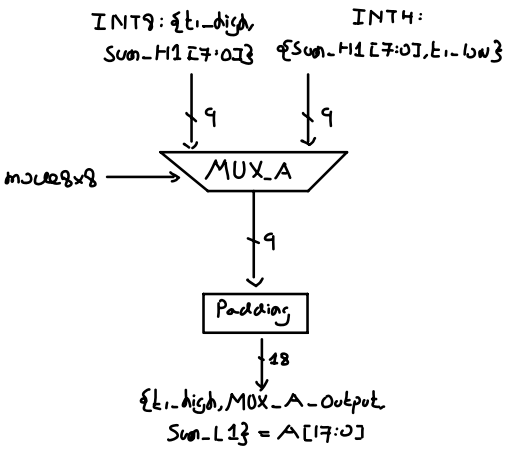
INT9: {t1_high, Sum_H1[7:0]}
INT4: {Sum_H1[7:0], t1_low}
9
9
mux8x8
MUX_A
9
Padding
18
{t1_high, MUX_A_Output, Sum_L1} = A[17:0]

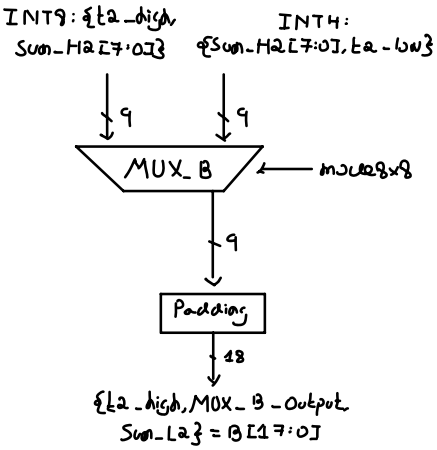
INT9: {t2_high, Sum_H2[7:0]}
INT4: {Sum_H2[7:0], t2_low}
9
9
MUX_B
mux8x8
9
Padding
18
{t2_high, MUX_B_Output, Sum_L2} = B[17:0]

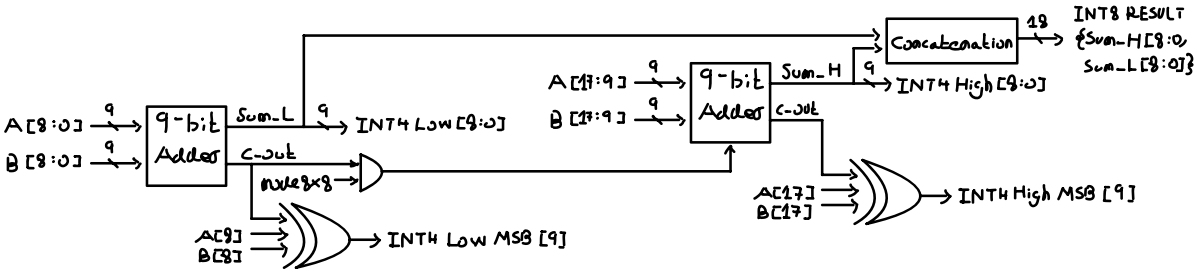
A[8:0]
B[8:0]
9
9-bit Adder
Sum_L
C_out
INT4 Low [9:0]
mux8x8
A[8]
B[8]
INT4 Low MSB [9]
A[17:9]
B[17:9]
9-bit Adder
Sum_H
INT4 High [9:0]
A[17]
B[17]
INT4 High MSB [9]
Concatenation
18
INT8 RESULT {Sum_H[8:0], Sum_L[8:0]}

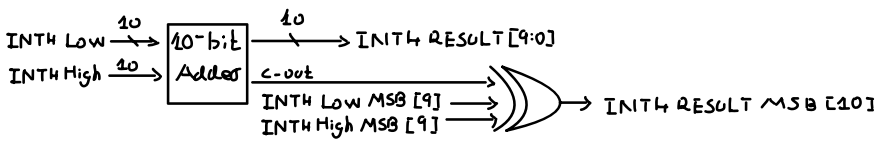
INTH Low
10
INTH High
10
10-bit
Adder
10
INTH RESULT [9:0]
c-out
INTH Low MSB [9]
INTH High MSB [9]
INTH RESULT MSB [10]